Data sheet

Hydraulic data

Maximum operating pressure *PN*	10 bar
Head max H_{max}	15,9 m
Flow max Q_{max}	74,0 m³/h
Minimum suction head at 50 °C *m*	7 m
Minimum suction head at 95 °C *m*	15 m
Minimum suction head at 110 °C	23 m
Min. fluid temperature T_{min}	-10 °C
Max. fluid temperature T_{max}	110 °C
Min. ambient temperature T_{min}	-10 °C
Max. ambient temperature T_{max}	40 °C

Motor data

Energy efficiency index (EEI)	0,17
Mains connection	1~230 V ±10%, 50/60 Hz
Rated power P_2	1414 W
Min. speed n_{min}	500 1/min
Max. speed n_{max}	3200 1/min
Power consumption $P_{1\,min}$	20 W
Power consumption $P_{1\,max}$	1645 W
Interference emission	EN 61800-3;2004+A1;2012 /residential area (C1)
Interference immunity	EN 61800-3;2004+A1;2012 /industrial environment (C2)
Insulation class	F
Protection class	IPX4D

Installation dimensions

Pipe connection on the suction side *DNs*	DN 80
Pipe connection on the pressure side *DNd*	DN 80
Port-to-port length *L0*	360 mm

Materials

Pump housing	Cast iron
Impeller	PPS-GF40
Shaft	1.4028, DLC-coated
Bearing	Carbon, antimony-impregnated

Pump curves

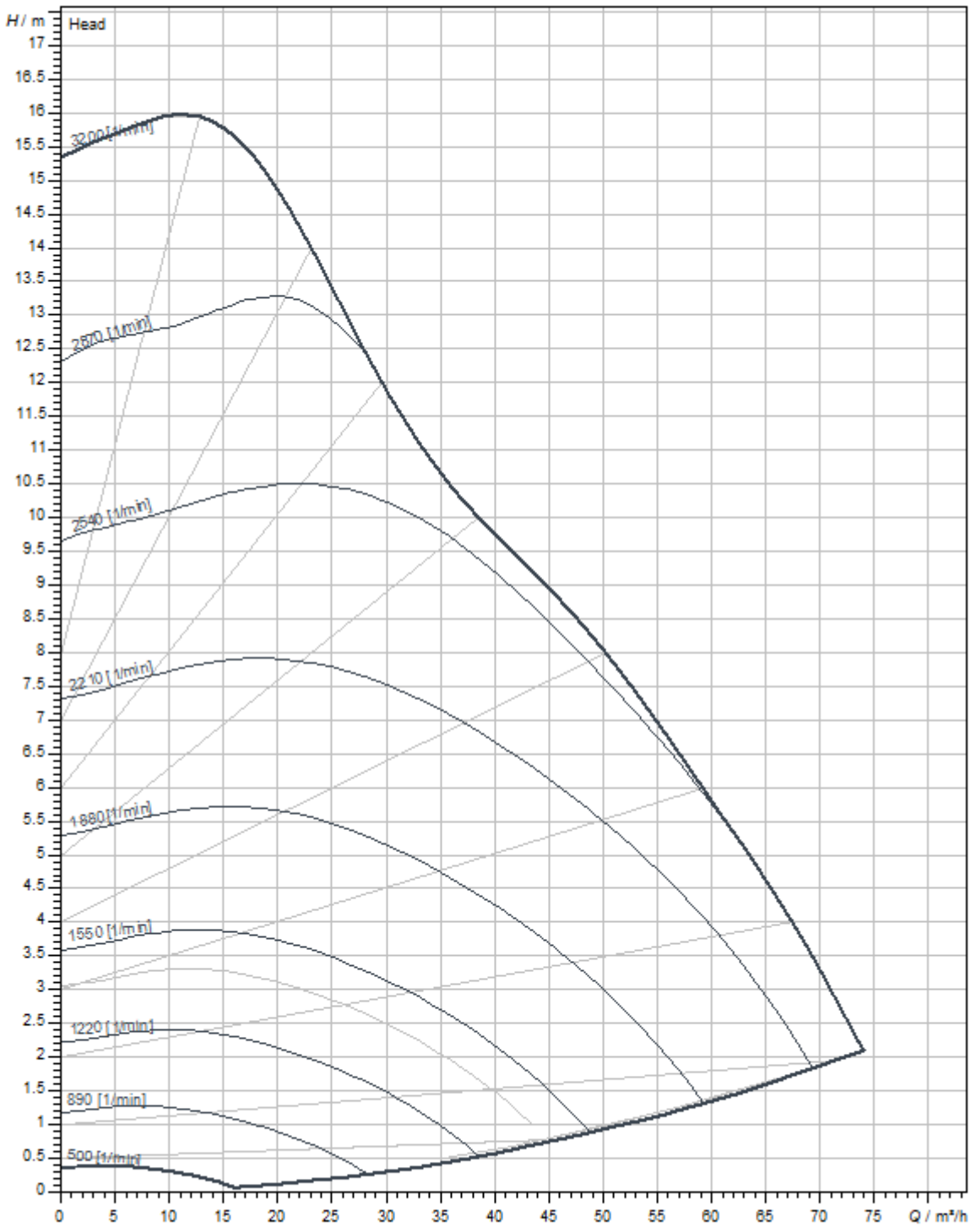
H / m
Head
3200 [1/min]
2870 [1/min]
2540 [1/min]
2210 [1/min]
1880 [1/min]
1550 [1/min]
1220 [1/min]
890 [1/min]
500 [1/min]
Q / m³/h

Dimensions and dimensions drawings

Stratos MAXO 80/0,5-16 PN 10

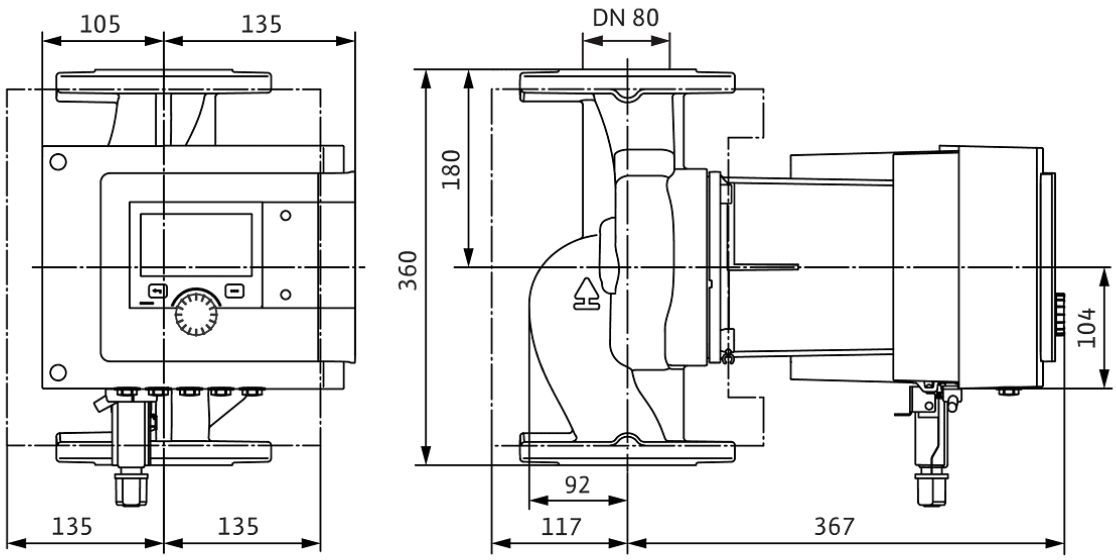

Wiring diagram

Standard: 1~ 230 V, 50/60 Hz, Option: 3~ 230 V, 50/60 Hz

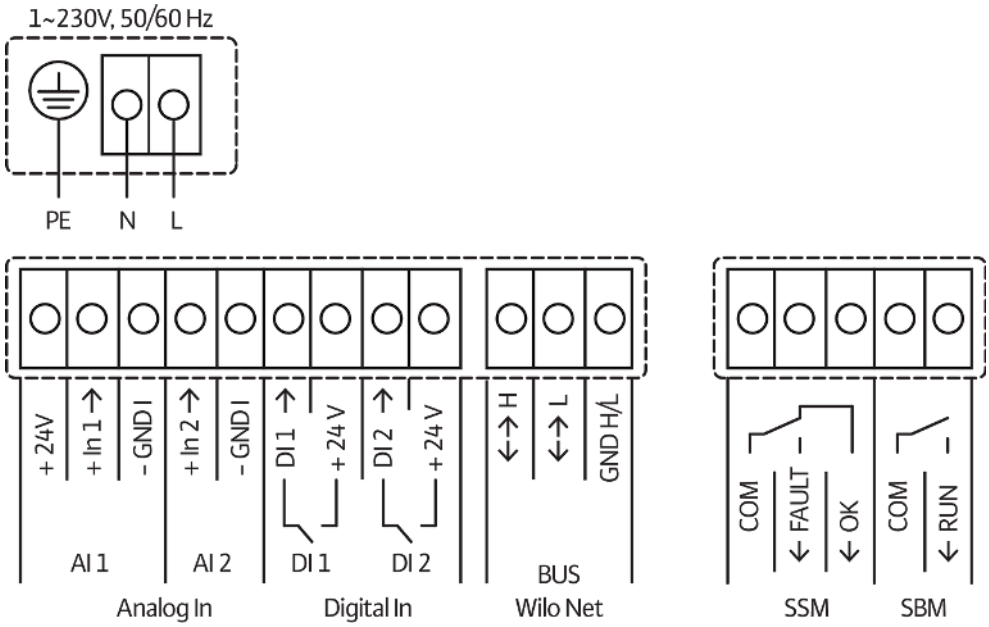

SSM: Collective fault signal (NC contact in accordance with VDI 3814, load capacity 1 A, 250 V ~)