Data sheet

Hydraulic data

Maximum operating pressure *PN*	16 bar
Head max H_{max}	10,0 m
Flow max Q_{max}	12,0 m³/h
Minimum suction head at 50 °C *m*	3 m
Minimum suction head at 95 °C *m*	10 m
Minimum suction head at 110 °C	16 m
Min. fluid temperature T_{min}	-10 °C
Max. fluid temperature T_{max}	110 °C
Min. ambient temperature T_{min}	-10 °C
Max. ambient temperature T_{max}	40 °C

Motor data

Energy efficiency index (EEI)	0,19
Mains connection	1~230 V ±10%, 50/60 Hz
Rated power P_2	234 W
Min. speed n_{min}	750 1/min
Max. speed n_{max}	3950 1/min
Power consumption $P_{1\,min}$	7 W
Power consumption $P_{1\,max}$	275 W
Interference emission	EN 61800-3;2004+A1;2012 /residential area (C1)
Interference immunity	EN 61800-3;2004+A1;2012 /industrial environment (C2)
Insulation class	F
Protection class	IPX4D

Installation dimensions

Pipe connection on the suction side *DNs*	G 1½
Pipe connection on the pressure side *DNd*	G 1½
Port-to-port length *L0*	180 mm

Materials

Pump housing	Cast iron
Impeller	PPS-GF40
Shaft	1.4122, DLC-coated
Bearing	Carbon, antimony-impregnated

Pump curves

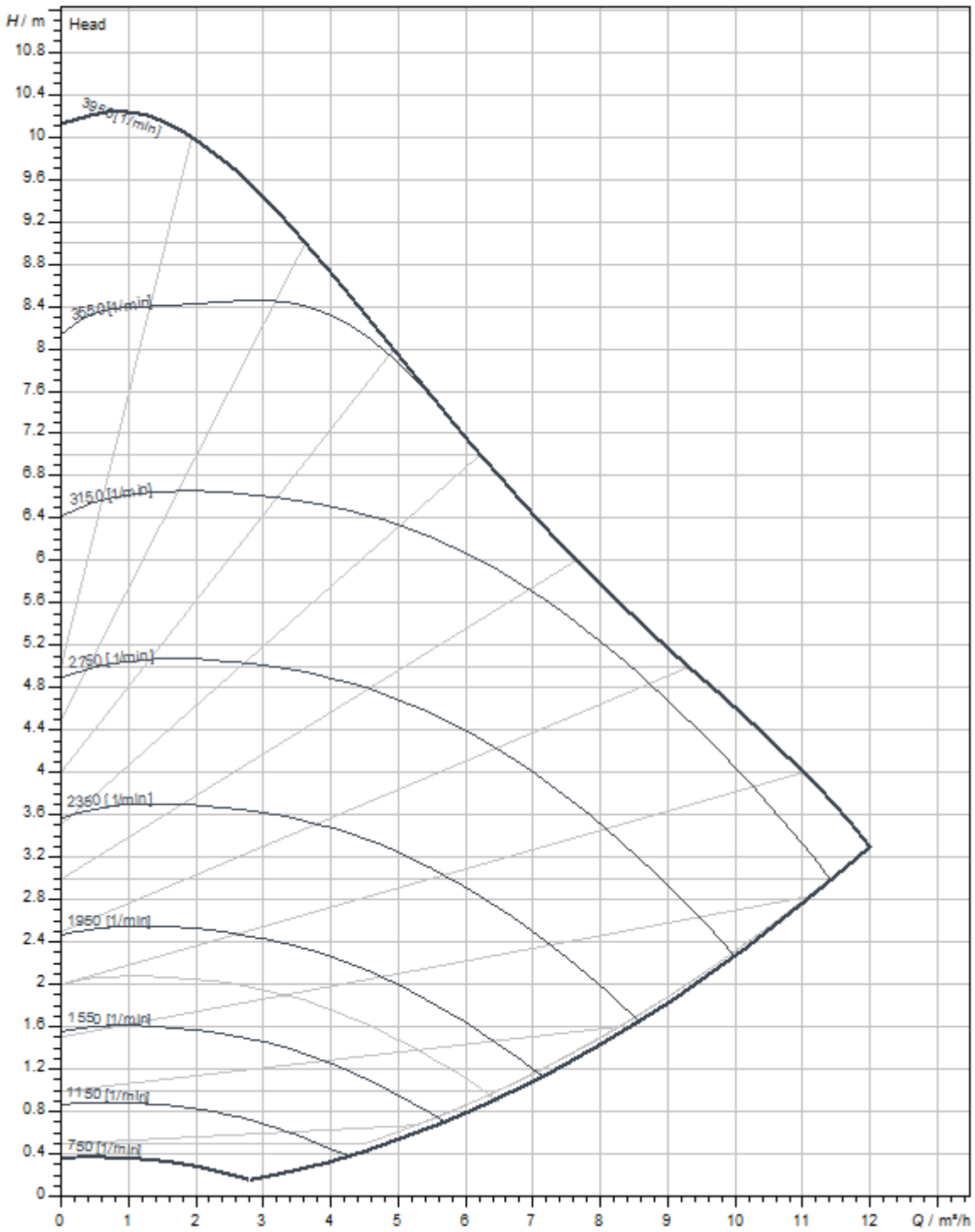
H / m
Head
10.8
10.4
10
9.6
9.2
8.8
8.4
8
7.6
7.2
6.8
6.4
6
5.6
5.2
4.8
4.4
4
3.6
3.2
2.8
2.4
2
1.6
1.2
0.8
0.4
0
3950 [1/min]
3550 [1/min]
3150 [1/min]
2750 [1/min]
2350 [1/min]
1950 [1/min]
1550 [1/min]
1150 [1/min]
750 [1/min]
0
1
2
3
4
5
6
7
8
9
10
11
12
Q / m³/h

Dimensions and dimensions drawings

Stratos MAXO 25/0,5-10 PN 16

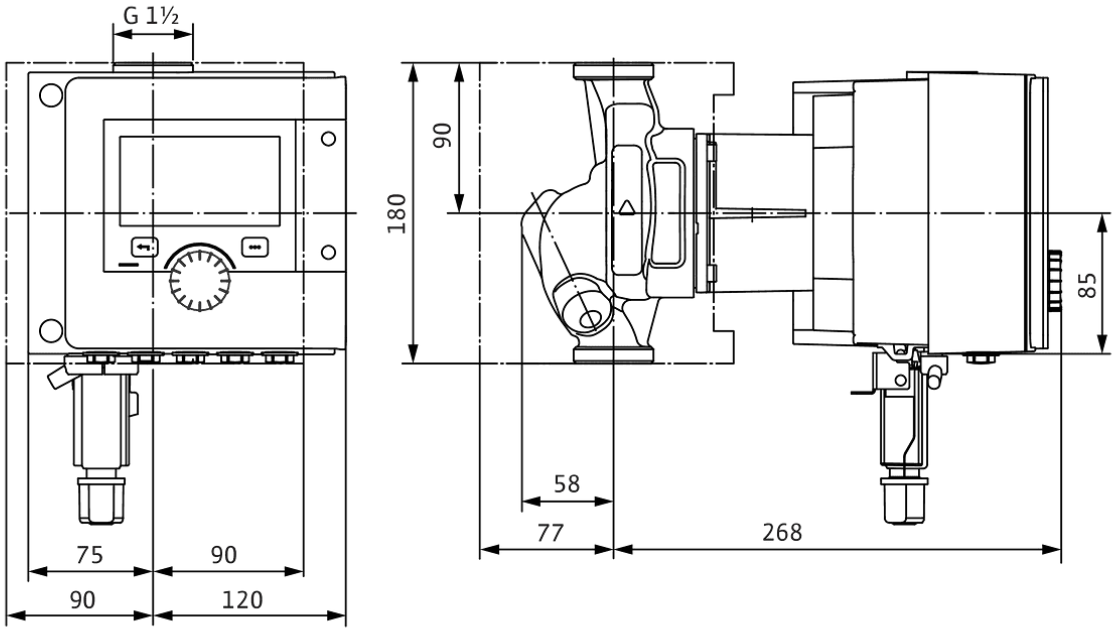

Wiring diagram

Standard: 1~ 230 V, 50/60 Hz, Option: 3~ 230 V, 50/60 Hz

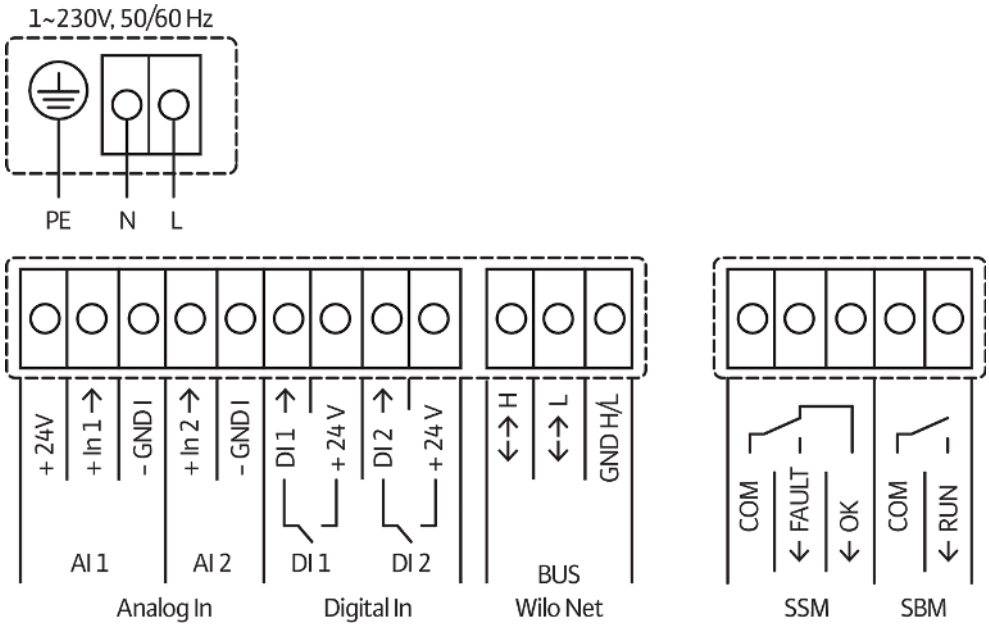

SSM: Collective fault signal (NC contact in accordance with VDI 3814, load capacity 1 A, 250 V ~)