2 YEAR WARRANTY

UK CA CE

MIKROFILL® by STUART TURNER

MIKROPRO 8 - 1000 | EXPANSION VESSELS

APPLICATION

Our complete range of expansion vessels are able to meet the requirements of almost any heating or chilled systems, with available models ranging from between 8 to 1000 litres capacity.

Models up to 25 litres are designed for wall mounting and models 35 litres and above to be floor standing.



FEATURES

- Maximum operating temperature of 70°C
- Maximum operating pressures of 3 bar (8 to 35 litre models) or 6 bar (50 to 1000 litre models)
- Threaded connections
- Colour grey, durable powder coated finish

BENEFITS

- For heating and chilled water applications
- All expansion vessels comply with the pressure equipment directive (PED) 97/23/EC
- Factory pre-set pressure

DIMENSIONS (8 - 140 LITRES)

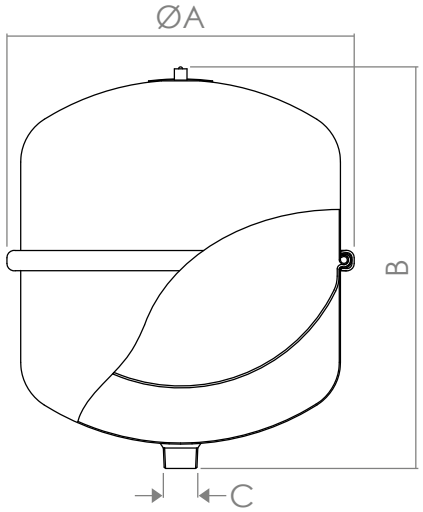

MIKROPRO 8 - 25

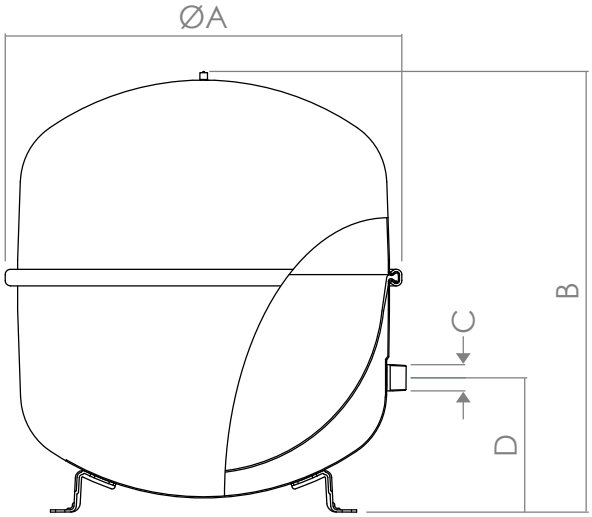

MIKROPRO 35 - 140

PART CODE	LITRE	A	B	C	WEIGHT
EVZ290008	8	272	236	¾"	1.7 kg
EVZ290012	12	272	313	¾"	2.8 kg
EVZ290018	18	308	360	¾"	3.6 kg
EVZ290025	25	308	481	¾"	4.4 kg

PART CODE	LITRE	A	B	C	D	WEIGHT
EVZ290035	35	376	466	¾"	130	5.6 kg
EVZ290050	50	441	487	¾"	175	9.6 kg
EVZ290080	80	512	558	1"	172	13.3 kg
EVZ290100	100	512	669	1"	172	15.8 kg
EVZ290140	140	512	890	1"	172	19.9 kg

All dimensions are in millimetres unless otherwise specified.

Mikrofill Systems Ltd. 11 Merse Road, North Moons Moat, Redditch, Worcestershire B98 9HL, UK
T +44 (0)3452 60 60 20 | **F** +44 (0)3452 60 60 21 | **E** info@mikrofill.com | **www.**mikrofill.com

2 YEAR WARRANTY

MIKROPRO 8 - 1000 | EXPANSION VESSELS

DIMENSIONS (200 - 1000 LITRES)

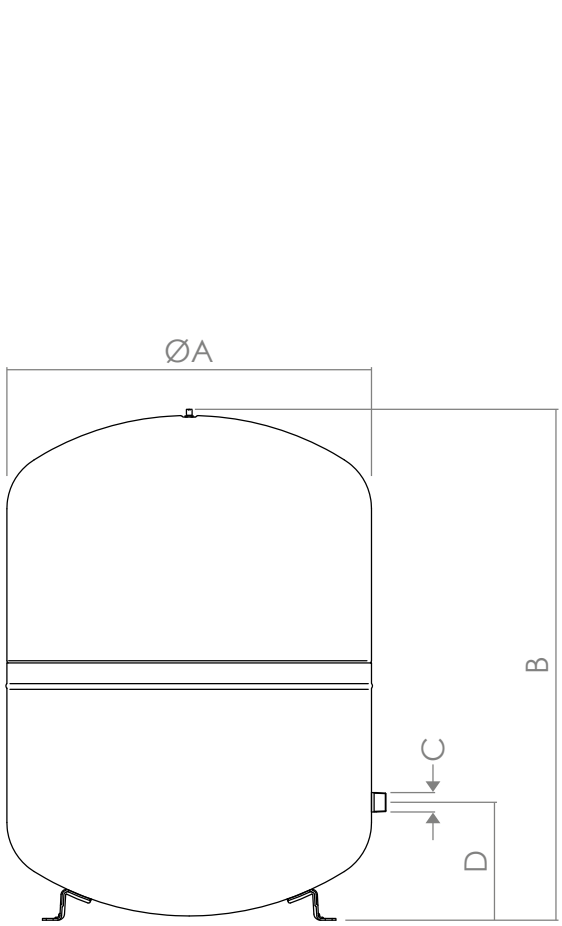

MIKROPRO 200 - 250

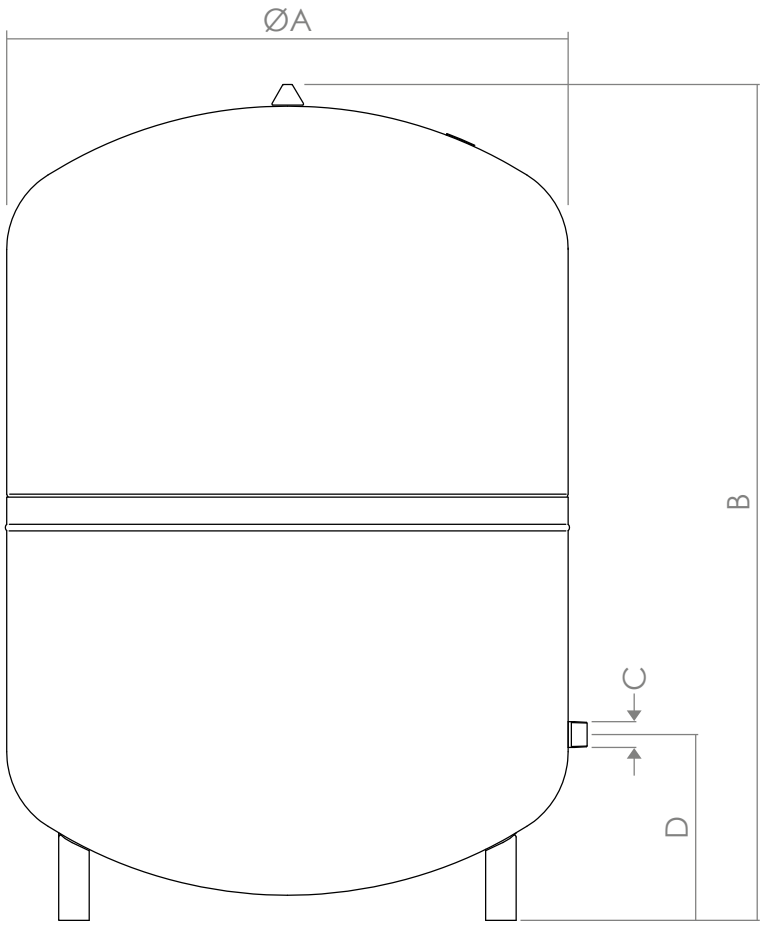

MIKROPRO 300 - 1000

PART CODE	LITRE	A	B	C	D	WEIGHT
EVZ290200	200	634	758	1"	205	37 kg
EVZ290250	250	634	890	1"	205	45 kg
EVZ290300	300	634	1090	1"	235	52 kg
EVZ290400	400	740	1066	1"	245	65 kg
EVZ290500	500	740	1290	1"	245	79 kg
EVZ290600	600	740	1530	1"	245	85 kg
EVZ290800	800	740	1995	1"	245	103 kg
EVZ291000	1000	740	2413	1"	245	118 kg

All dimensions are in millimetres unless otherwise specified.

TECHNICAL SPECIFICATION

Maximum Working Pressure:	**3 bar (8 - 35 litres) / 6 bar (50 - 1000 litres)**
Maximum Operating Temperature:	**70°C**

MATERIALS

Coating:	**Powder Epoxy**
Connections:	**Carbon Steel**
Diaphragm:	**Synthetic Rubber Compound**
Shell:	**Carbon Steel**

Mikrofill Systems Ltd. 11 Merse Road, North Moons Moat, Redditch, Worcestershire B98 9HL, UK
T +44 (0)3452 60 60 20 | **F** +44 (0)3452 60 60 21 | **E** info@mikrofill.com | **www.**mikrofill.com

2021/08 Rev. 02