Data sheet: Yonos MAXO 30/0,5-12

Hydraulic data

Max. volume flow *Q*	11.7 m^3/h
Max. delivery head *H*	12.00 m
Energy efficiency index (EEI)	0.20

Product data

Maximum operating pressure *PN*	10 bar
Max. ambient temperature *T*	40 °C
Min. ambient temperature *T*	-20 °C
Max. fluid temperature *T*	110 °C
Min. fluid temperature *T*	-10 °C

Motor data

Mains connection	1~230 V ±10%, 50/60 Hz
Power consumption $P_{1\ max}$	305 W
Power consumption $P_{1\ min}$	10 W
Max current I_{max}	1.33 A
Min current I_{min}	0.15 A
Max. speed n_{max}	4800 rpm
Min. speed n_{min}	1000 rpm
Insulation class	F
Protection class	IPX4D
Emitted interference	EN 61800-3;2004+A1;2012 /residential area (C1)
Interference resistance	EN 61800-3;2004+A1;2012 /industrial environment (C2)

Installation dimensions

Pipe connection on the pressure side	G 2
Pipe connection on the suction side	G 2
Port-to-port length *l0*	180 mm

Materials

Bearing	Carbon, metal impregnated
Impeller	PPE/PS-GF30
Pump housing	5.1300, EN-GJL-200
Shaft	1.4122, X39CrMo17-1

Information for order placements

Brand	Wilo
Product description	Yonos MAXO 30/0,5-12
Article number	2120644
Net weight, approx. *m*	5 kg

Dimensions and dimensions drawings: Yonos MAXO 30/0,5-12

Yonos MAXO

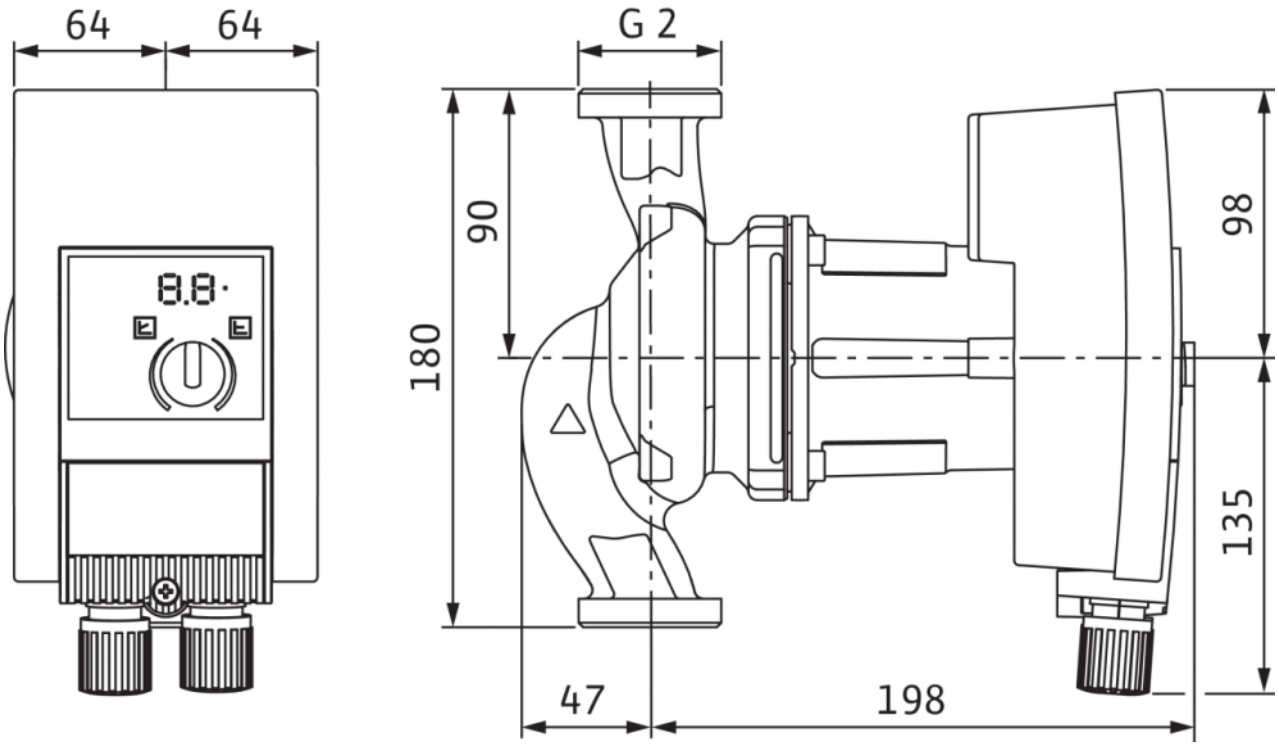

Pump curves: Yonos MAXO 30/0,5-12

Yonos MAXO 25/0,5-12

