Data sheet

Hydraulic data

Minimum efficiency index (MEI)	0,4
Maximum operating pressure *PN*	10 bar
Min. fluid temperature T_{min}	-20 °C
Max. fluid temperature T_{max}	120 °C
Min. ambient temperature T_{min}	0 °C
Max. ambient temperature T_{max}	40 °C

Motor data

Mains connection	3~380 V, 50/60 Hz
Motor efficiency class	IE4
Rated power P_2	3 kW
Rated current I_N	9,3 A
Rated speed *n*	2900 1/min
Max. speed n_{max}	2900 1/min
Interference emission	EN 61800-3
Interference immunity	EN 61800-3
Insulation class	F
Protection class motor	IP55
Integrated full motor protection	-
Threaded cable connection	1 x M16x1.5

Materials

Pump housing	Cast iron
Impeller	PPE/PS-GF30
Shaft	Stainless steel
Shaft seal	AQ1EGG
Lantern	Cast iron

Approved liquids (other liquids upon request)

Heating water (as per VDI 2035)	yes
Heat carrier oil	Special version at additional charge
Cooling and cold water circulation systems	yes
Water-glycol mixtures (at 20 – 40 vol. % glycol and fluid temperature ≤ 40 °C)	yes

Installation dimensions

Port-to-port length *L0*	360 mm
Pipe connection on the suction side *DNs*	DN 80
Pipe connection on the pressure side *DNd*	DN 80

Pump curves

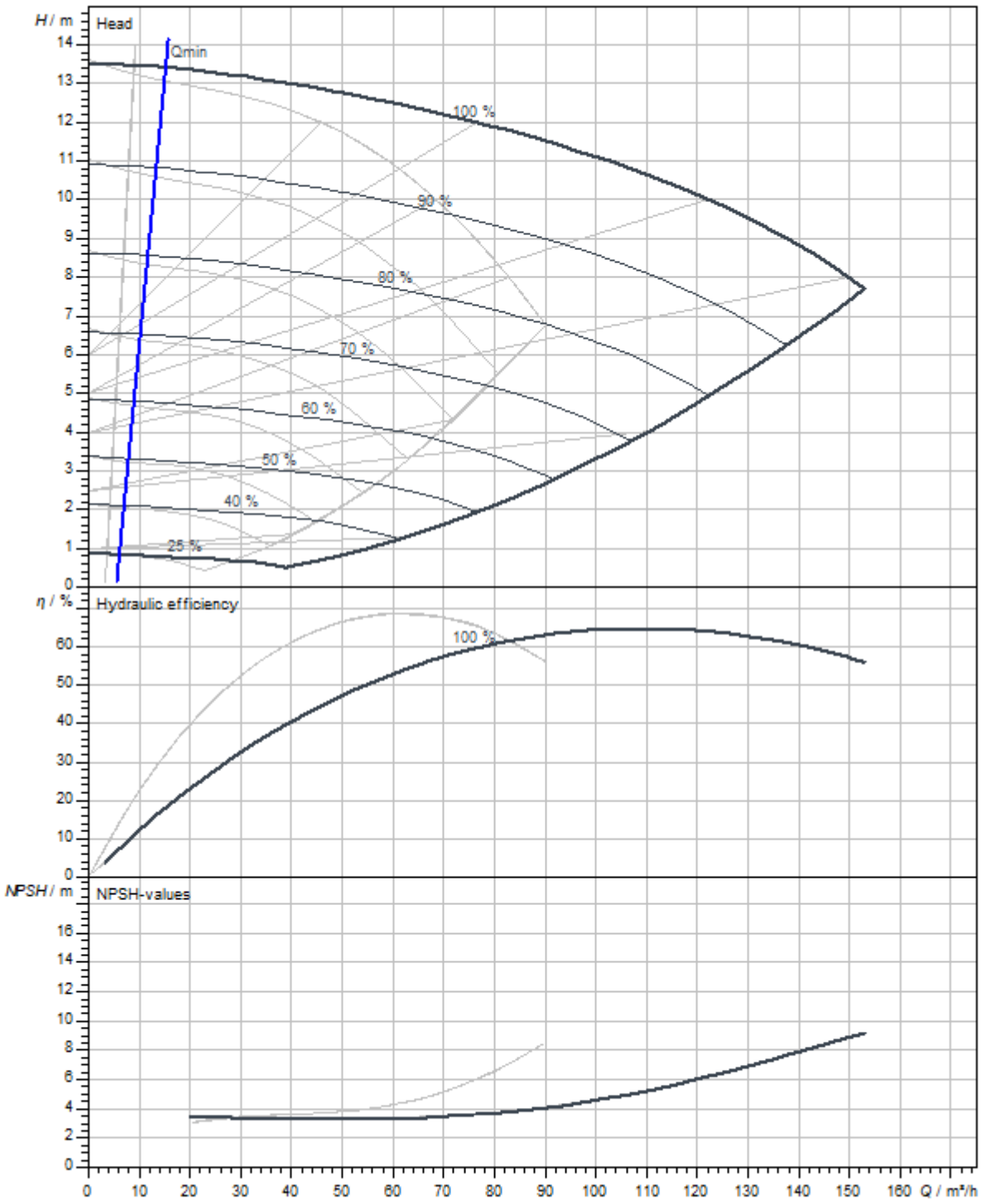
H / m
Head
Qmin
100 %
90 %
80 %
70 %
60 %
50 %
40 %
25 %
η / %
Hydraulic efficiency
100 %
NPSH / m
NPSH-values
Q / m³/h

Dimensions and dimensions drawings

VeroTwin-DP-E 80/105-3/2-R1

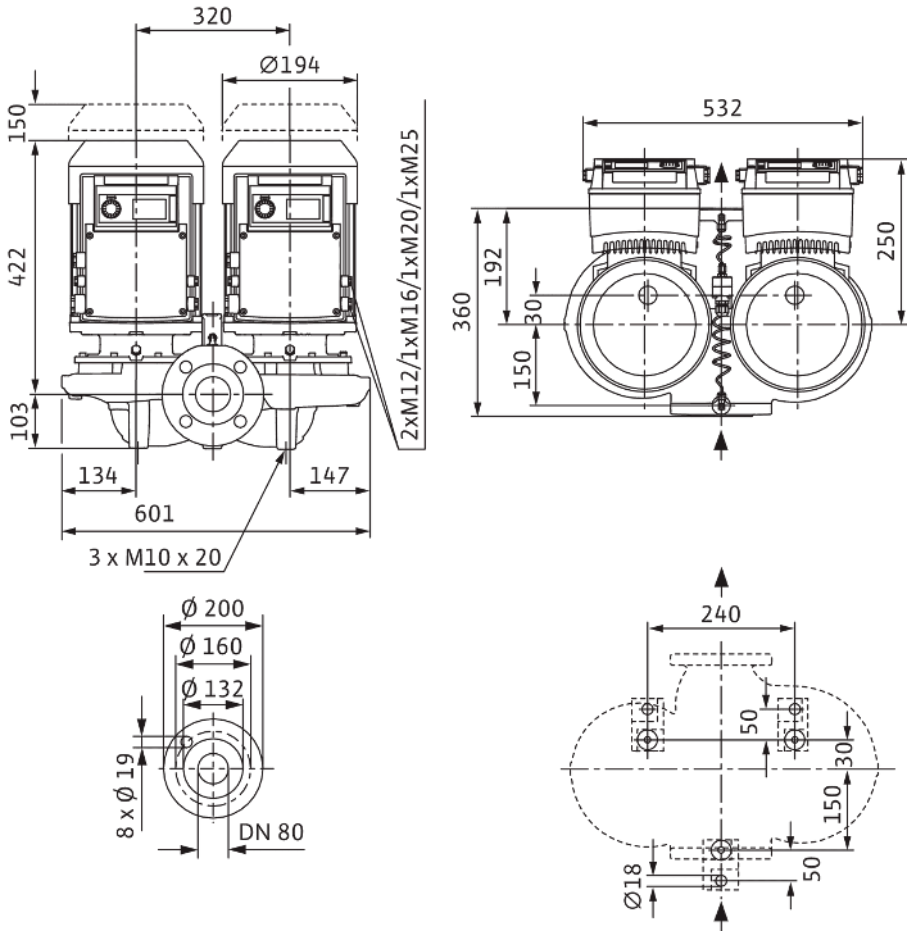

Note:

Housing with feet for installation on a base and drilled holes M10, brackets on request.

Wiring diagram

IL-E

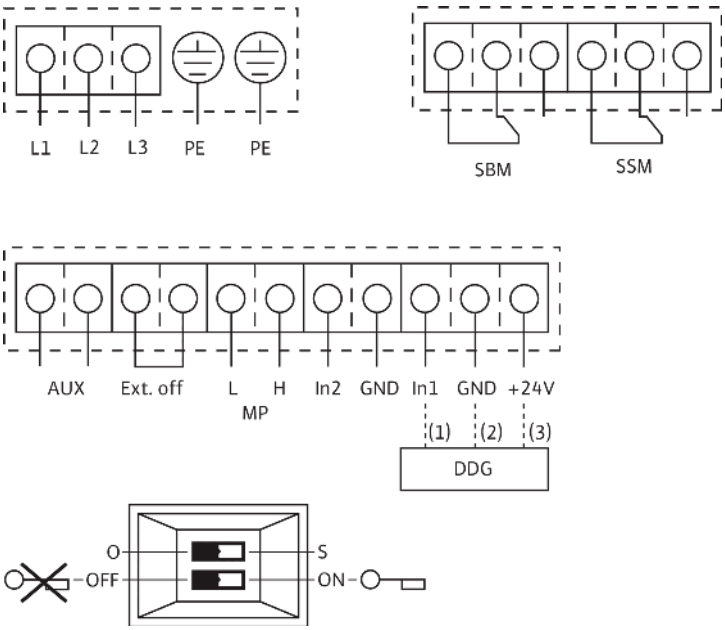

L1, L2, L3:	Mains connection: 3~440 V ±10%, 50/60 Hz; 3~400 V ±10%, 50/60 Hz; 3~380 V -5%/+10%, 50/60 Hz
PE:	Protective conductor connection
DDG:	Connection for differential pressure sensor
In1 (1):	Actual value input 0-10 V/0-20 mA; 2-10 V/4-20 mA
GND (2):	Ground connection for In1 and In2
+ 24 V (3):	DC voltage output for an external consumer/sensor. Max load 60 mA
In2:	Setpoint input 0-10 V/0-20 mA; 2-10 V/4-20 mA
MP:	Multi-pump, interface for dual pump management
Ext. off:	Control input “Overriding Off”The pump can be switched on or off via an external, potential-free contact (24 V DC/10 mA).
SBM:*	Potential-free collective run signal (changeover contact according to VDI 3814)
SSM:*	Potential-free collective fault signal (changeover contact according to VDI 3814)
aux:	External pump cycling (only with dual pump operation). Pump cycling can be performed using an external, potential-free contact (24 VDC/10 mA)
DIP switch:	1: Switchover between operation (O) and service mode (S)2: Activate/deactivate the menu for access disable
Optional:	IF-Modules for connection to the building automation

* Load capacity of contacts for SBM and SSM:

min.: 12 V DC/10 mA

max.: 250 V AC/1 A