Data sheet

Hydraulic data

Maximum operating pressure *PN*	10 bar
Max. fluid temperature T_{max}	70 °C
Min. fluid temperature T_{min}	2 °C
Min. ambient temperature T_{min}	0 °C
Max. ambient temperature T_{max}	40 °C
Temperature range at max. ambient temperature +40 °C *T*	+2...+70

Motor data

Mains connection	1~230 V, 50/60 Hz
Rated power P_2	0,03 kW
Rated current I_N	0,44 A
Min. speed n_{min}	800 1/min
Max. speed n_{max}	4200 1/min
Power consumption $P_{1\,min}$	3 W
Power consumption $P_{1\,max}$	45 W
Interference emission	EN 61000-6-3
Interference immunity	EN 61000-6-2
Electromagnetic compatibility	EN 61800-3
Insulation class	F
Protection class motor	IPX4D
Speed control	Frequency converter
Motor protection	no

Materials

Pump housing	Stainless steel
Impeller	PPE-GF30
Shaft	Stainless steel
Bearing	Carbon, synthetic resin-impregnated

Installation dimensions

Pipe connection on the suction side *DNs*	G 1½
Pipe connection on the pressure side *DNd*	G 1½
Port-to-port length *L0*	180 mm

Pump curves

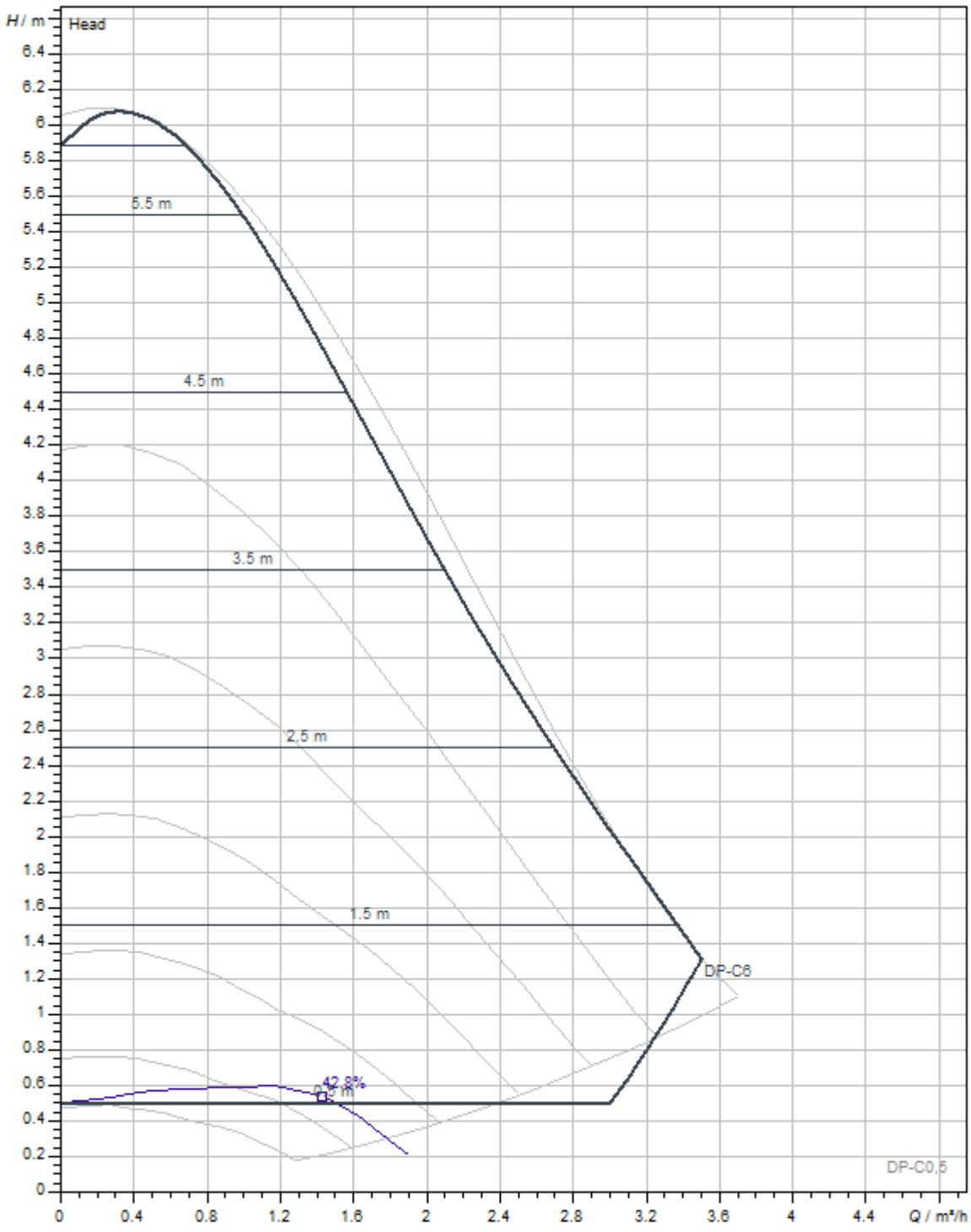

Dimensions and dimensions drawings

4216473_ConGraph_stratos_pico_z_25_180__dim_01_1405

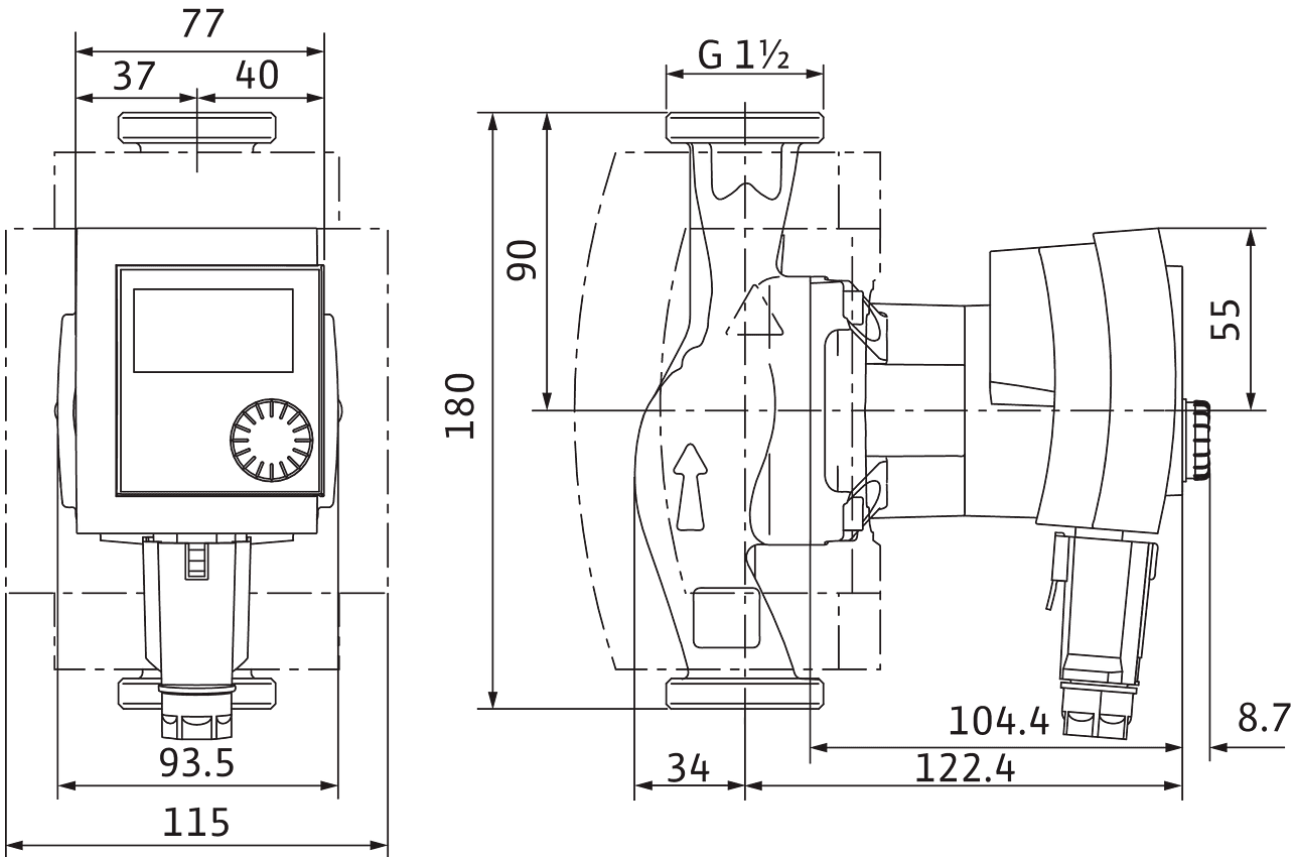

Wiring diagram

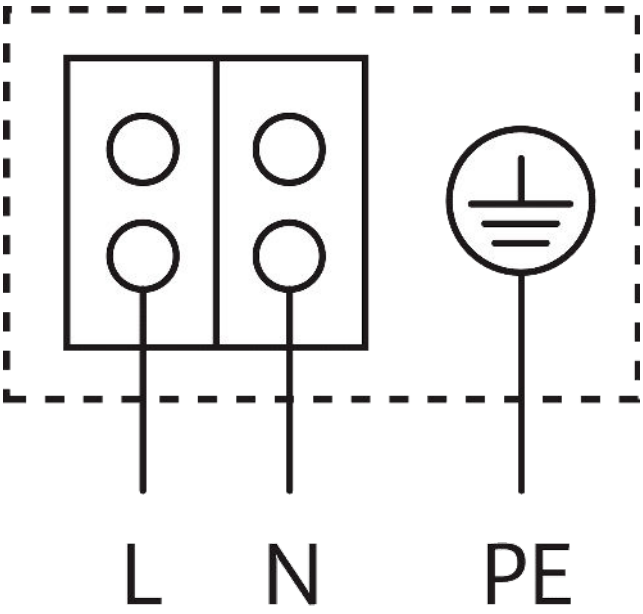

Blocking current-proof motor

Single-phase motor (EM) 2-pole - 1~230 V, 50 Hz