

Data sheet

Hydraulic data

Maximum operating pressure *PN*	10 bar
Head max H_{max}	6.1 m
Flow max Q_{max}	0.0 m³/h
Minimum suction head at 50 °C *m*	0.5 m
Minimum suction head at 95 °C *m*	3 m
Minimum suction head at 110 °C	10 m
Min. fluid temperature T_{min}	-10 °C
Max. fluid temperature T_{max}	110 °C
Max. fluid temperature at max. ambient temperature of +25 °C T_{max}	110 °C
Max. fluid temperature at max. ambient temperature of +40 °C T_{max}	95 °C
Min. ambient temperature T_{min}	-10 °C
Max. ambient temperature T_{max}	40 °C

Motor data

Energy efficiency index (EEI)	0.18
Mains connection	1~230 V ±10%, 50/60 Hz
Rated power P_2	30 W
Min. speed n_{min}	700 1/min
Max. speed n_{max}	4200 1/min
Power consumption $P_{1\,min}$	3 W
Power consumption $P_{1\,max}$	40 W
Interference emission	EN 61000-6-3
Interference immunity	EN 61000-6-2
Electromagnetic compatibility	EN 61800-3
Threaded cable connection	1 x PG11
Insulation class	F
Protection class	IPX4D

Materials

Pump housing	Grey cast iron
Impeller	PP-GF40
Shaft	Stainless steel
Bearing	Carbon, metal-impregnated

Installation dimensions

Pipe connection on the discharge side *DNd*	G 1½
Pipe connection on the suction side *DNs*	G 1½
Port-to-port length *L0*	130 mm

Pump curves

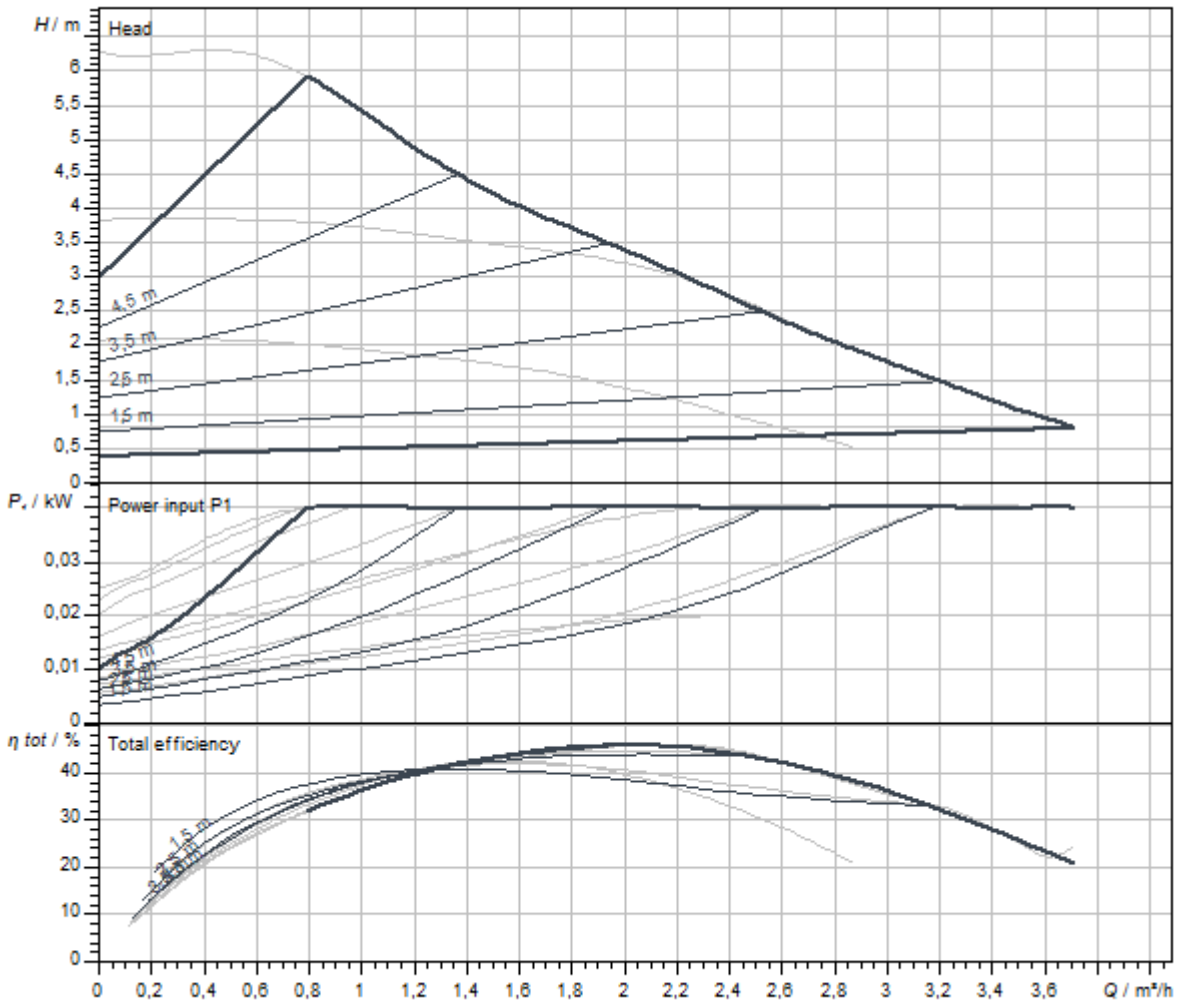

Fluid media	Water 100 %
Fluid temperature *T*	20,00 °C
speed at duty point *n hydr. @ OP*	4.149 1/min

Dimensions and dimensions drawings

Stratos PICO 25/0,5-6-130

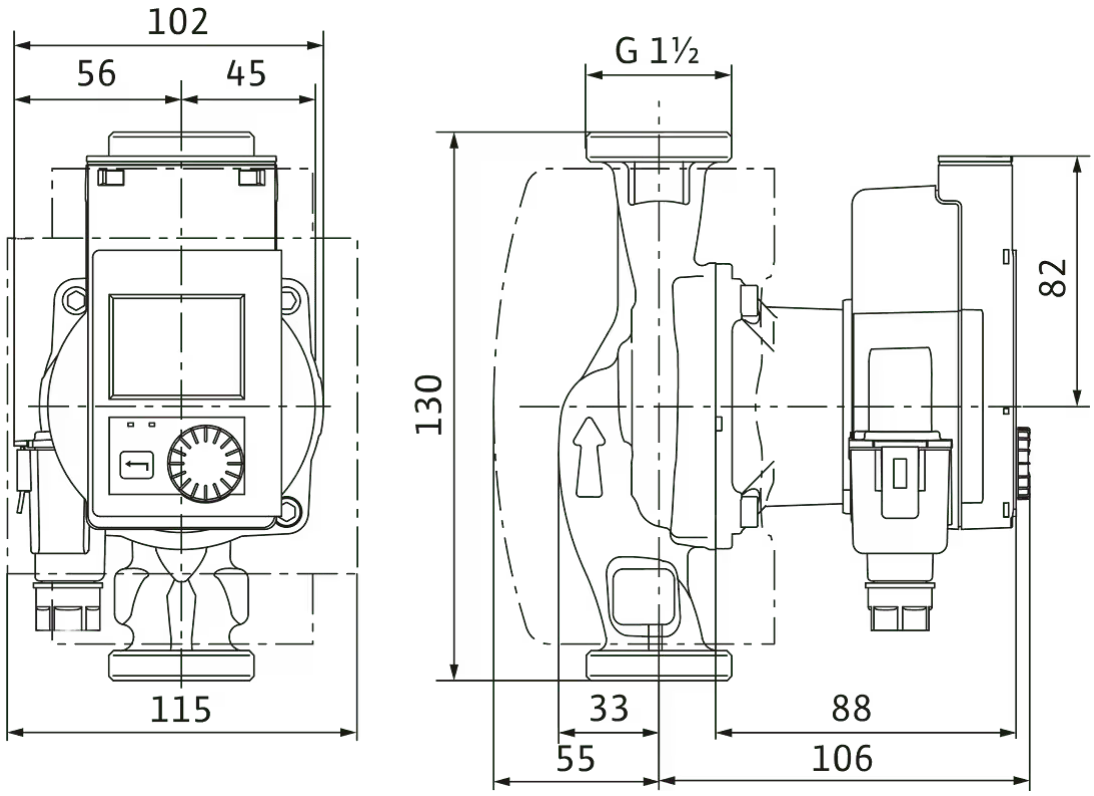

Wiring diagram

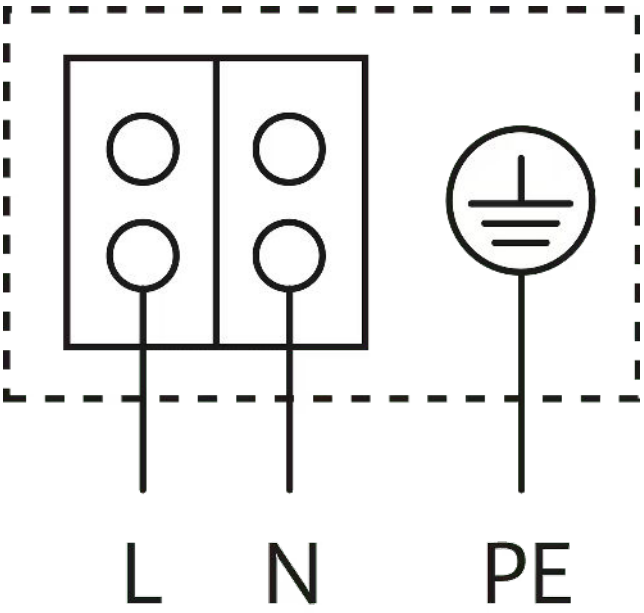

Blocking current-proof motor

Single-phase motor (EM) 2-pole - 1~230 V, 50 Hz

Ordering information

Product data

Brand	Wilo
Product description	Stratos PICO 25/0,5-6-130
Article number	4244396
EAN number	4062679126081
Colour	Green
Minimum order quantity	1
Date of sales availability	2022-01-01
Previous model article number	4216617
Previous model designation	Stratos PICO 25/1-6-130

Packaging

Number per layer	20
Packaging property	Sales packaging
Packaging type	Cardboard box
Pieces per pallet	146

Dimension, weight

Length with packaging	194 mm
Length *L*	160 mm
Height with packaging	121 mm
Height *H*	114 mm
Width with packaging	213 mm
Width *W*	165 mm
Gross weight, approx. *m*	2 kg
Net weight, approx. *m*	1.7 kg

Tender text

WILO Stratos PICO, electronically controlled high efficiency pump

Glandless circulator with screwed connection, blocking-current proof synchronous motor using ECM technology (up to 90 % energy saving compared to an uncontrolled pump) and built-in electronic power control for continuous differential pressure control.

Can be used for all heating and air-conditioning applications (-10 °C to +110 °C).

Control mode can be selected in accordance with the radiator/underfloor heating application.

Control modes:

- Permanent, automatic power adjustment to system requirements without setpoint specification **Wilo Dynamic Adapt plus** (factory setting)
- Settings assistant for **number of radiators** or **underfloor heating area**
- Variable differential pressure **(Δp-v)**
- Constant differential pressure **(Δp-c)**
- Constant speed **(n-const.)**

Functions:

- Automatic setback operation
- Fault/warning message display including description and error code in plain text
- Venting routine for automatic venting of the rotor chamber
- Manual restart function for additional deblocking of the pump as required
- Key lock
- Function for resetting the electricity meter or for resetting the settings to the factory settings
- Dry-running detection
- Automatic deblocking function and integrated motor protection
- Supports hydraulic balancing with the Wilo-Assistant app

Version:

- Graphic colour display with operation via one button manual operation level
- Slot for Wilo communication modules as an interface for e.g. Bluetooth
- Use the Wilo-Assistant app to read and set operating data and –among other things– set up a commissioning protocol through the Bluetooth interface (as an accessory)
- Minimal consumption only 3 W
- Equipped as standard with a thermal insulation shell
- 5-year warranty
- High efficiency, TÜV tested (the certificate can be seen at www.wilo.com/legal)

Optional accessories:

- Wilo-Smart Connect module BT for Bluetooth connection to mobile devices via Wilo-Assistant app

Operating Data

Fluid temperature *T*	-10 °C
Ambient temperature *T*	-10 °C
Maximum operating pressure *PN*	10 bar
Minimum suction head at 50 °C *m*	0.5 m
Minimum suction head at 95 °C *m*	3 m
Minimum suction head at 110 °C	10 m

Motor data

Energy efficiency index (EEI)	0.18
Interference emission	EN 61000-6-3
Interference immunity	EN 61000-6-2
Mains connection	1~230 V, 50/60 Hz
Power consumption $P_{1\,max}$	40 W
Min. speed n_{min}	700 1/min
Max. speed n_{max}	4200 1/min
Protection class motor	IPX4D
Threaded cable connection	1 x PG11

Materials

Pump housing	Grey cast iron
Impeller	PP-GF40
Shaft	Stainless steel
Bearing	Carbon, metal-impregnated

Ordering information

Brand	Wilo
Product description	Stratos PICO 25/0,5-6-130
Net weight, approx. *m*	1.7 kg
Article number	**4244396**

Installation dimensions

Pipe connection on the suction side *DNs*	G 1½
Pipe connection on the discharge side *DNd*	G 1½
Port-to-port length *L0*	130 mm

Services

With Wilo as your partner, you can not only be sure of choosing high-quality product solutions, but also of benefiting from a comprehensive, worry-free package of well thought-out services. We collaborate to develop a service concept tailored to your individual needs; with our expertise and personal consultancy, we make sure that the operation of your systems is as energy-efficient, reliable and economical as possible. All the while our competent Wilo service technicians are ready to assist you with fast, reliable and on-time support.

Recommended services

Wilo-Live Assistant Service	2216415
System Optimisation Glandless pumps	2219250
Energy Solutions Glandless pumps	2219285

More suitable services

Extended warranty glandless pumps	2219589
Supervision Glandless pumps	2219320
Installation Glandless pumps	2219355
Commissioning Glandless pumps	2219390
Maintenance BASIC Glandless pumps	2219530
Maintenance COMFORT Glandless pumps	2219416

Maintenance PREMIUM Glandless pumps	2219545
Repair Glandless pumps	2219609